* 0000800000001 *

Cambridge Assessment International Education

Cambridge IGCSE™

CANDIDATE NAME	

CENTRE NUMBER						CANDIDATE NUMBER				

* 8 5 4 9 3 7 7 7 6 5 *

DESIGN & TECHNOLOGY **0445/42**

Paper 4 Systems & Control **May/June 2025**

1 hour

You must answer on the question paper.

No additional materials are needed.

INSTRUCTIONS

- Section A: answer **all** questions.
- Section B: answer **one** question.
- Use a black or dark blue pen. You may use an HB pencil for any diagrams or graphs.
- Write your name, centre number and candidate number in the boxes at the top of the page.
- Answer in the space provided.
- Do **not** use an erasable pen or correction fluid.
- Do **not** write on any bar codes.
- You may use a calculator.

INFORMATION

- The total mark for this paper is 50.
- The number of marks for each question or part question is shown in brackets [ ].
- All dimensions are in millimetres unless otherwise stated.

This document has **20** pages. Any blank pages are indicated.

DC (KS/CB) 343378/6
© UCLES 2025

Section A

Answer **all** questions in this section.

1 Add two ticks (✓) to each item, **A**, **B** and **C**, in Fig. 1.1 to identify the type of structure and if it is man-made or natural.

	A	B	C
		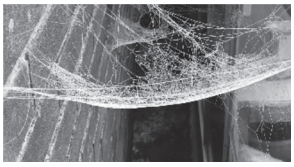	
frame			
shell			
mass			
man-made			
natural			

Fig. 1.1

[6]

2 Suspension bridges are often supported by steel cables.
Give **two** properties of steel that make it suitable for use in cables.

1 .....

2 .....

[2]

3 Fig. 3.1 shows a wooden structure.
State the method that has been used in the wooden structure to ensure rigidity.

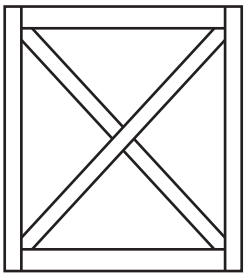

Fig. 3.1

..... [1]

DO NOT WRITE IN THIS MARGIN

4 Friction can be reduced by design.
Give **two** examples of how friction can be reduced when designing a car.

1 .....

.....

2 .....

.....
[2]

5 Fig. 5.1 shows part of the drive mechanism on a steam locomotive.

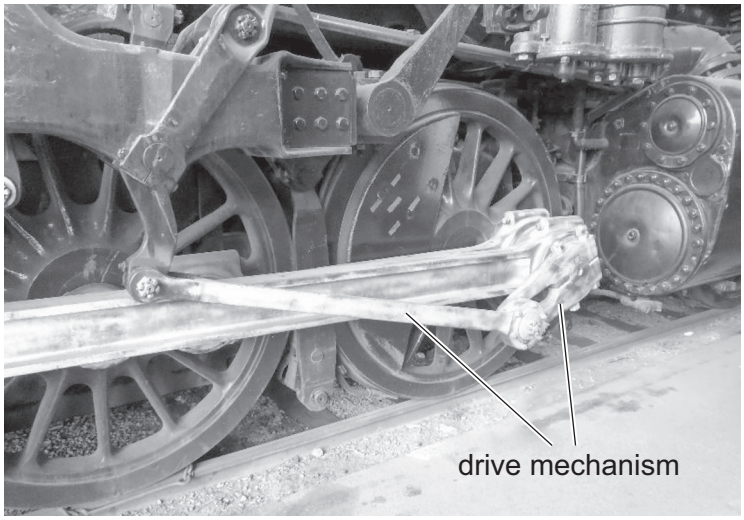

Fig. 5.1

Describe how friction could be reduced in the moving parts of the drive mechanism.

.....

.....

..... [2]

DO NOT WRITE IN THIS MARGIN

6 **(a)** State the type of motion associated with each symbol in Fig. 6.1.

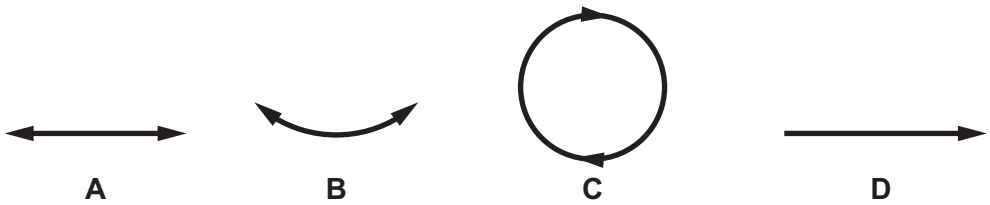

A ..... **B** .....

C ..... **D** .....

Fig. 6.1

[4]

(b) Give **one** example of a mechanism that uses motion **B**.

..... [1]

7 **(a)** State the purpose of a switch in an electronic circuit.

..... [1]

(b) Name the type of switch shown in Fig. 7.1.

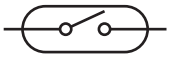

Fig. 7.1

..... [1]

(c) Describe how the switch in Fig. 7.1 is operated.

.....

.....

..... [2]

DO NOT WRITE IN THIS MARGIN

8 Table 8.1 shows multiple and submultiple voltage values. Complete Table 8.1 to show each value converted into volts.

One has been done for you.

Table 8.1

Value	Converted to Volts
2.1 kV	
4 MV	
20 mV	
50 μV	0.00005 V

[3]

DO NOT WRITE IN THIS MARGIN

Section B

Answer **one** question from this section.

9 **(a)** **(i)** State what is meant by a 'moment' in a structure.

.....

..... [1]

(ii) State the unit of measurement applied in moments calculations.

..... [1]

(iii) Fig. 9.1 shows a fire door in a building that uses a door closer to ensure that the fire door remains closed when not in use.

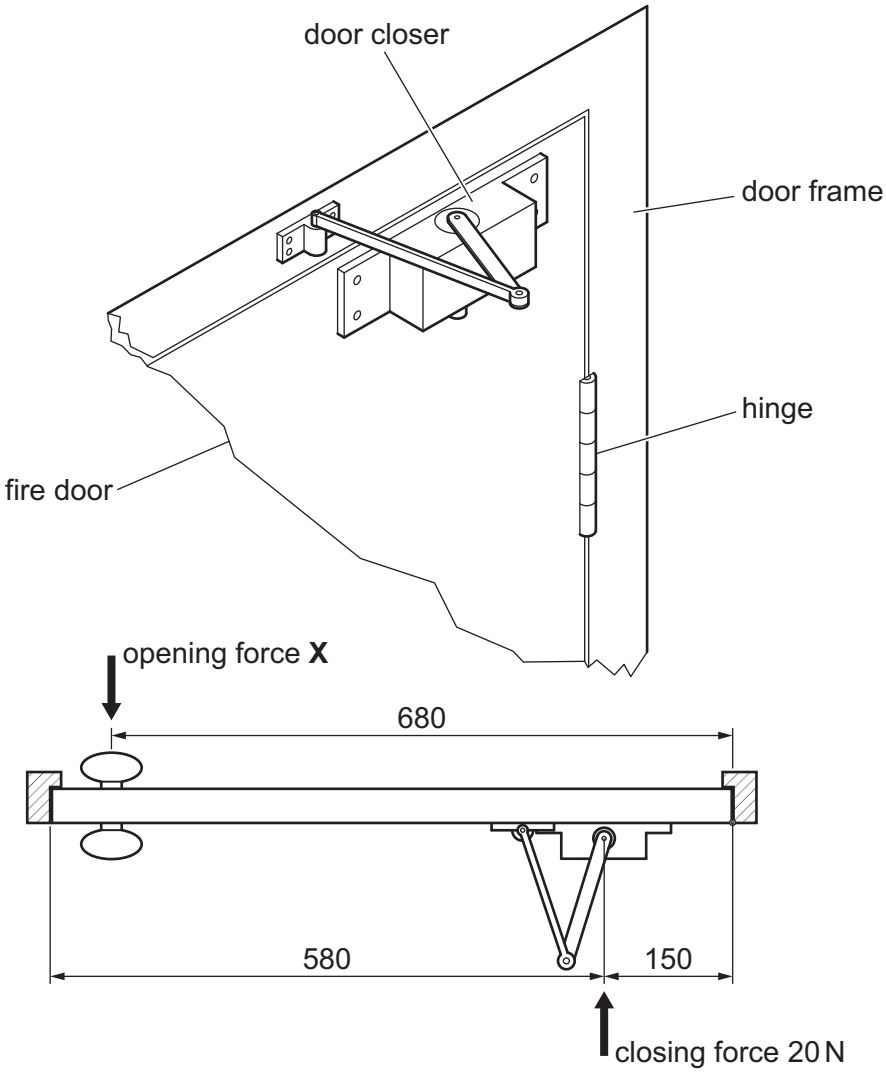

Fig. 9.1

Calculate the minimum value of force **X** that will be necessary to open the door.

.....

.....

..... [3]

DO NOT WRITE IN THIS MARGIN

(b) Fig. 9.2 shows three methods of joining timber to extend the length.

Give **one** benefit and **one** drawback for each method.

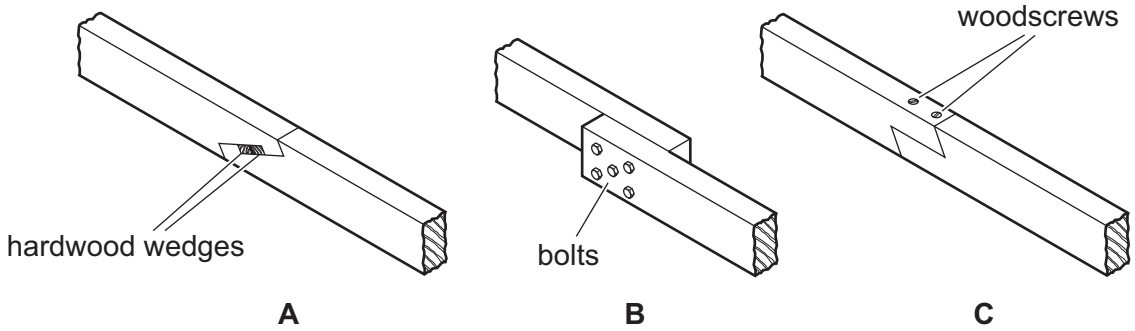

Fig. 9.2

Method **A** benefit .....

.....

Method **A** drawback .....

.....

Method **B** benefit .....

.....

Method **B** drawback .....

.....

Method **C** benefit .....

.....

Method **C** drawback .....

.....

[6]

DO NOT WRITE IN THIS MARGIN

(c) **(i)** Explain what is meant by the term 'laminating' in a structure.

.....

.....

..... [2]

(ii) Name **two** materials that can be used in a laminated structure.

1 .....

2 .....
[2]

(d) **(i)** Fig. 9.3 shows roof supports in a building.

Fig. 9.3

Name the method that has been used to join the parts of the roof supports.

..... [1]

(ii) Explain why welding is used in modern building construction rather than the method shown in Fig. 9.3.

.....

.....

..... [2]

DO NOT WRITE IN THIS MARGIN

(e) **(i)** State what is meant by the term 'equilibrium' in a structure.

.....

..... [1]

(ii) Fig. 9.4 shows a flagpole that needs to remain vertical.
Use sketches and notes to show **one** method of supporting the flagpole in a vertical position.

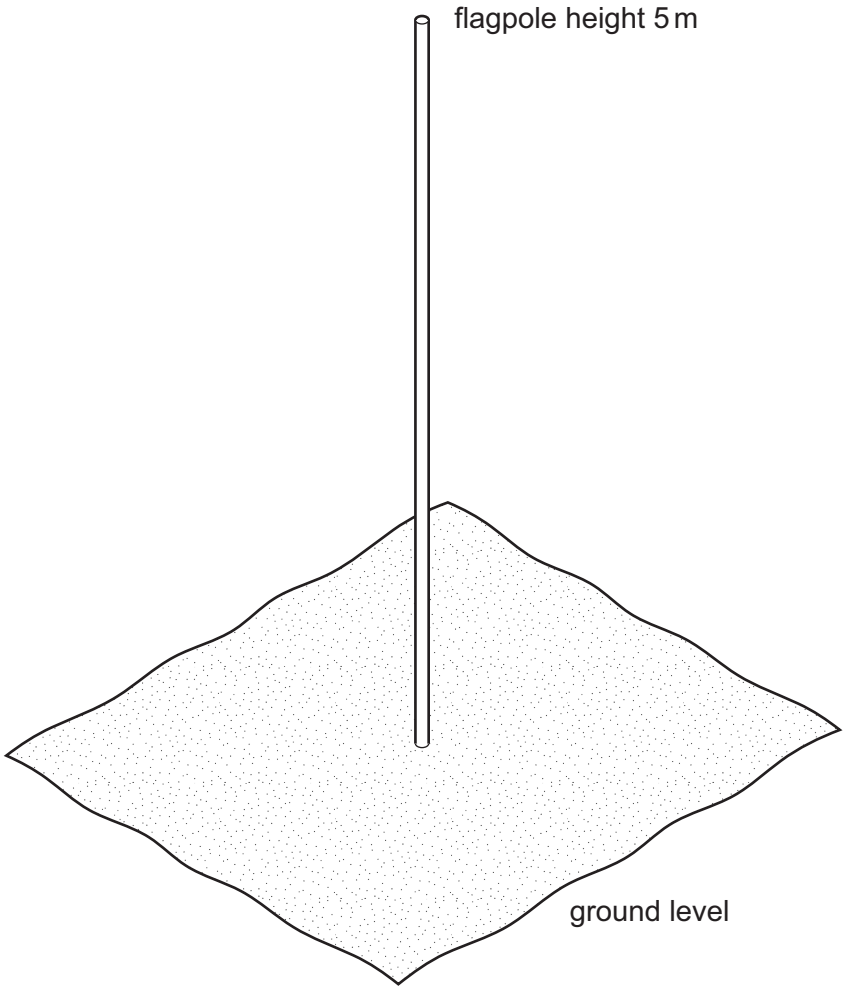

Fig. 9.4

[3]

DO NOT WRITE IN THIS MARGIN

(f) Fig. 9.5 shows a steel cable on a crane arm with a load attached to it.
A 15 m length of cable is found to stretch by 2 mm when the load is raised.

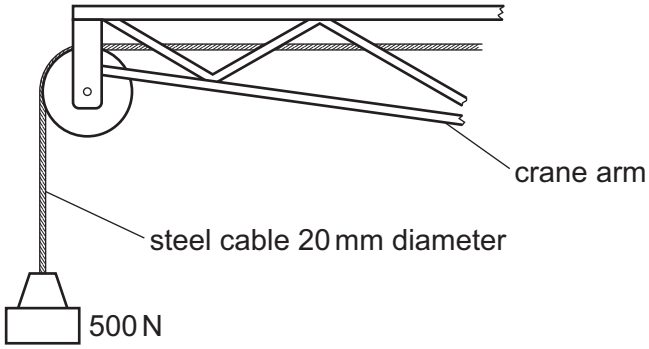

Fig. 9.5

Calculate the strain in the steel cable.

Use the formula: strain = $\frac{\text{change in length}}{\text{original length}}$

.....

.....

.....

..... [3]

DO NOT WRITE IN THIS MARGIN

10 **(a)** Fig. 10.1 shows a pair of garden loppers used to cut branches from trees.

Fig. 10.1

(i) State the order of lever used in the garden loppers.

..... [1]

(ii) Add labels to Fig. 10.1 to indicate the position of the fulcrum, load and effort. [3]

(iii) Describe how the garden loppers can be maintained to prevent loss of efficiency.

.....

.....

.....

..... [2]

(iv) Calculate the mechanical advantage in the garden loppers.

.....

.....

.....

..... [2]

DO NOT WRITE IN THIS MARGIN

(b) Fig. 10.2 shows part of a rack and pinion gear system for raising and lowering a drill table.

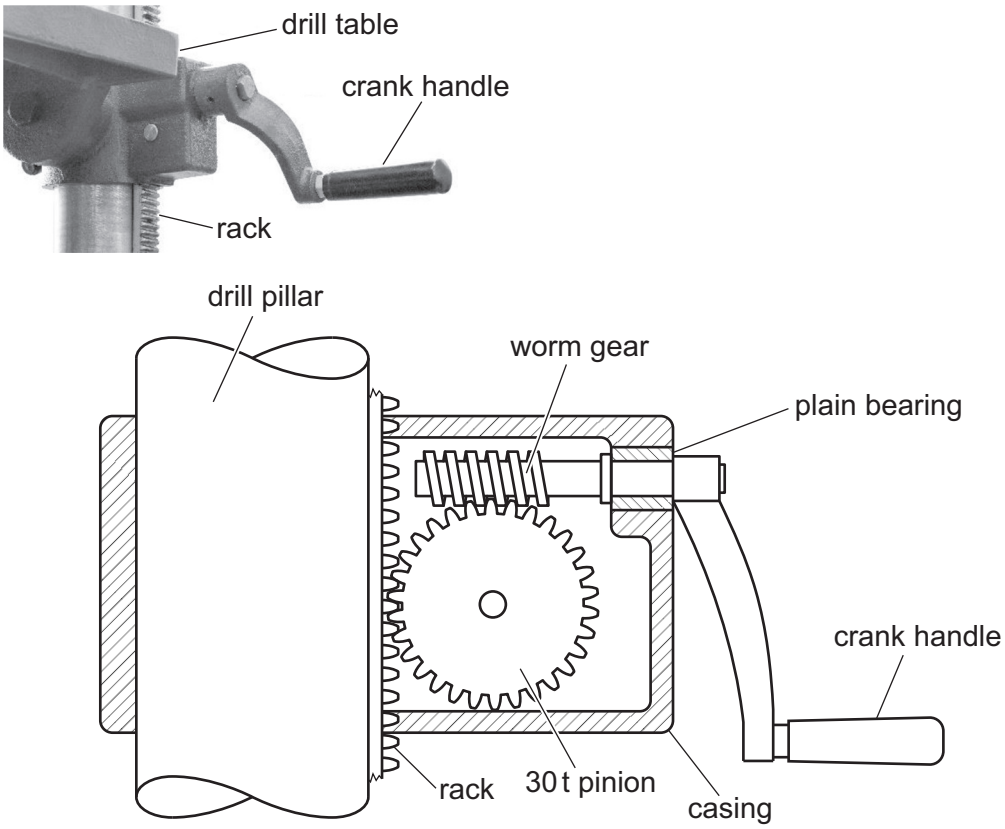

Fig. 10.2

(i) The pitch of the teeth on the rack is 2.5 mm.
Calculate the distance and direction of movement of the drill table when the crank handle is turned **clockwise** through 720 degrees.

.....

.....

.....

..... [3]

(ii) Explain why the rack and pinion system has been chosen for moving the drill table.

.....

.....

..... [2]

DO NOT WRITE IN THIS MARGIN

(iii) The worm gear in Fig. 10.2 rotates in a plain bearing.
Describe what is meant by a plain bearing.

.....

..... [2]

(iv) Give **two** reasons for choosing the plain bearing shown in Fig. 10.2.

1 .....

2 .....
[2]

(v) State **two** actions that should be taken to prevent wear in the drill rack and pinion gear system.

1 .....

2 .....
[2]

(c) **(i)** Explain what is meant by an idler gear in a gear mechanism.

.....

.....

..... [3]

(ii) Fig. 10.3 shows a simple gear mechanism.
Driver gear **A** rotates clockwise at 150 rpm.
Calculate the speed of gear **B** and indicate the direction of rotation.

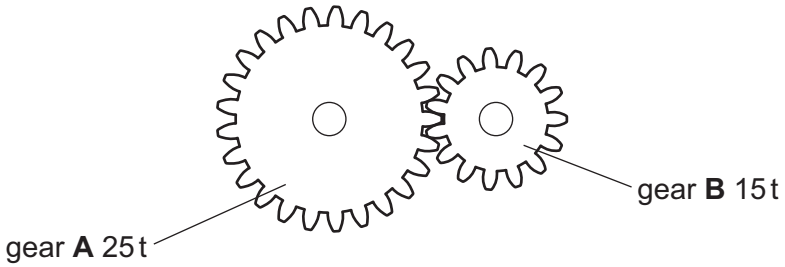

Fig. 10.3

.....

.....

..... [3]

DO NOT WRITE IN THIS MARGIN

11 **(a)** Fig. 11.1 shows two incomplete light-emitting diode (LED) circuits.

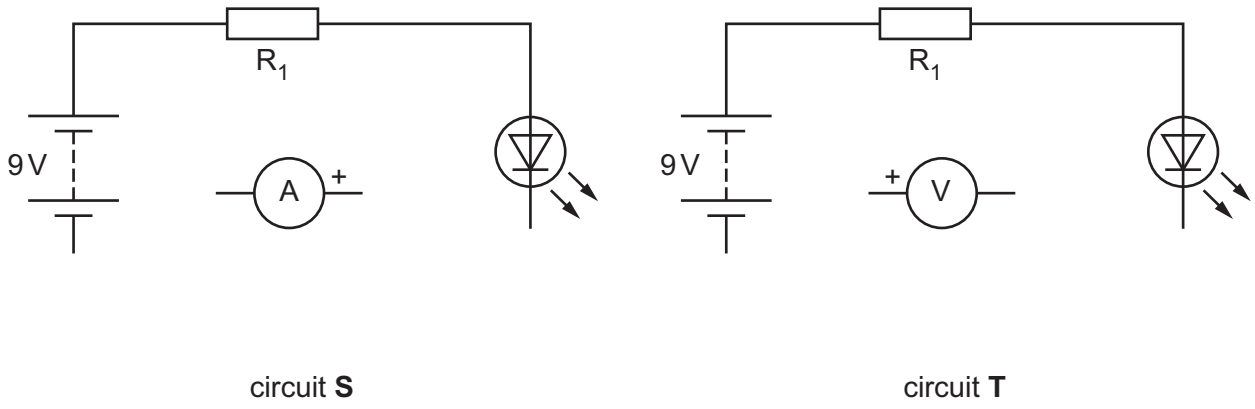

Fig. 11.1

(i) Complete circuit **S** to show how the current through the LED could be measured. [2]

(ii) Complete circuit **T** to show how the voltage across the LED could be measured. [2]

(b) Fig. 11.2 shows three tools used when constructing circuits.

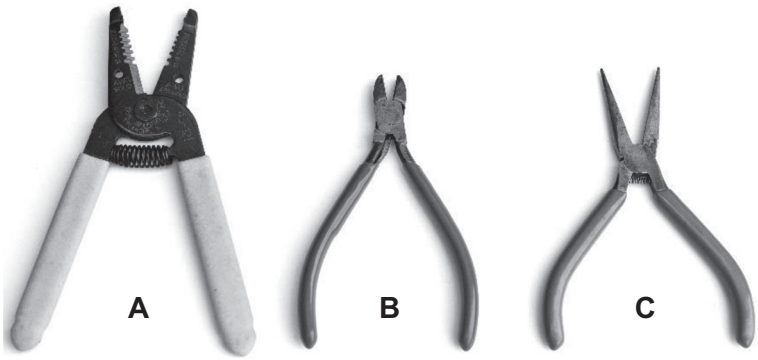

Fig. 11.2

(i) State the purpose of each tool shown in Fig. 11.2.

A .....

B .....

C .....

[3]

DO NOT WRITE IN THIS MARGIN

(ii) Multicore solder contains flux which is incorporated in the solder.
Give **two** reasons for incorporating flux in solder.

1 .....

2 .....
[2]

(iii) Use sketches and notes to show **two** connection methods used in circuit construction that do **not** involve soldering.

[4]

DO NOT WRITE IN THIS MARGIN

(c) Fig. 11.3 shows three capacitors.

X **Y** **Z**

Fig. 11.3

(i) Explain why care should be taken when fitting capacitors **X** and **Y** into a printed circuit board (PCB).

.....

.....

..... [2]

(ii) State the result of connecting two capacitors in parallel.

..... [1]

DO NOT WRITE IN THIS MARGIN

(d) Fig. 11.4 shows a circuit that will be used in a warning light.

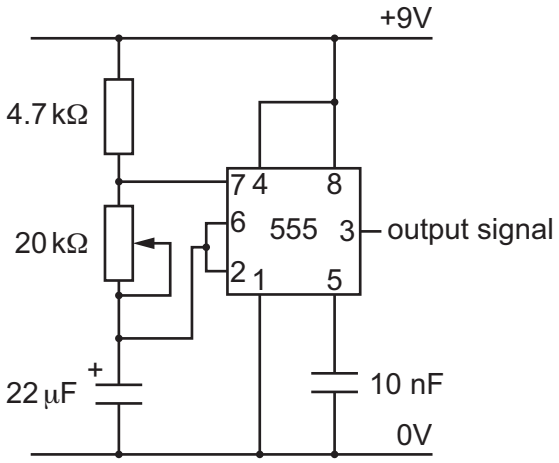

Fig. 11.4

(i) Describe the output signal that will be produced at pin 3.

.....

..... [2]

(ii) Calculate the time period of the output when R_2, the 20 kΩ potentiometer, is set to 12 kΩ.

Use the formula $T = 0.693(R_1 + 2R_2)C$

.....

.....

.....

..... [3]

DO NOT WRITE IN THIS MARGIN

(iii) Fig. 11.5 shows the components needed for the output to the warning light.

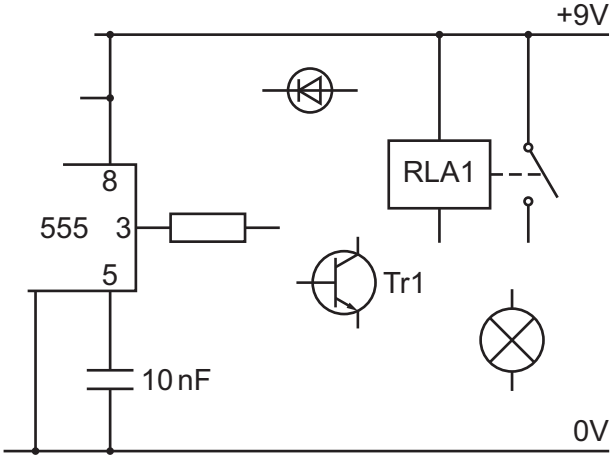

Fig. 11.5

The transistor (Tr1) will operate the relay (RLA1) which will control the warning light. Complete the connections for the output to the warning light. [4]

DO NOT WRITE IN THIS MARGIN

BLANK PAGE

DO NOT WRITE IN THIS MARGIN

BLANK PAGE

Permission to reproduce items where third-party owned material protected by copyright is included has been sought and cleared where possible. Every reasonable effort has been made by the publisher (UCLES) to trace copyright holders, but if any items requiring clearance have unwittingly been included, the publisher will be pleased to make amends at the earliest possible opportunity.

To avoid the issue of disclosure of answer-related information to candidates, all copyright acknowledgements are reproduced online in the Cambridge Assessment International Education Copyright Acknowledgements Booklet. This is produced for each series of examinations and is freely available to download at www.cambridgeinternational.org after the live examination series.

Cambridge Assessment International Education is part of Cambridge Assessment. Cambridge Assessment is the brand name of the University of Cambridge Local Examinations Syndicate (UCLES), which is a department of the University of Cambridge.

© UCLES 2025

DO NOT WRITE IN THIS MARGIN
DO NOT WRITE IN THIS MARGIN
DO NOT WRITE IN THIS MARGIN
DO NOT WRITE IN THIS MARGIN
DO NOT WRITE IN THIS MARGIN